NO.	NAME	Q'TY	MATERIAL	WEIGHT PER ONE	WEIGHT TOTAL	REMARKS
1	FILTER BAG		PTFE	2.1Kg		
2						
3						

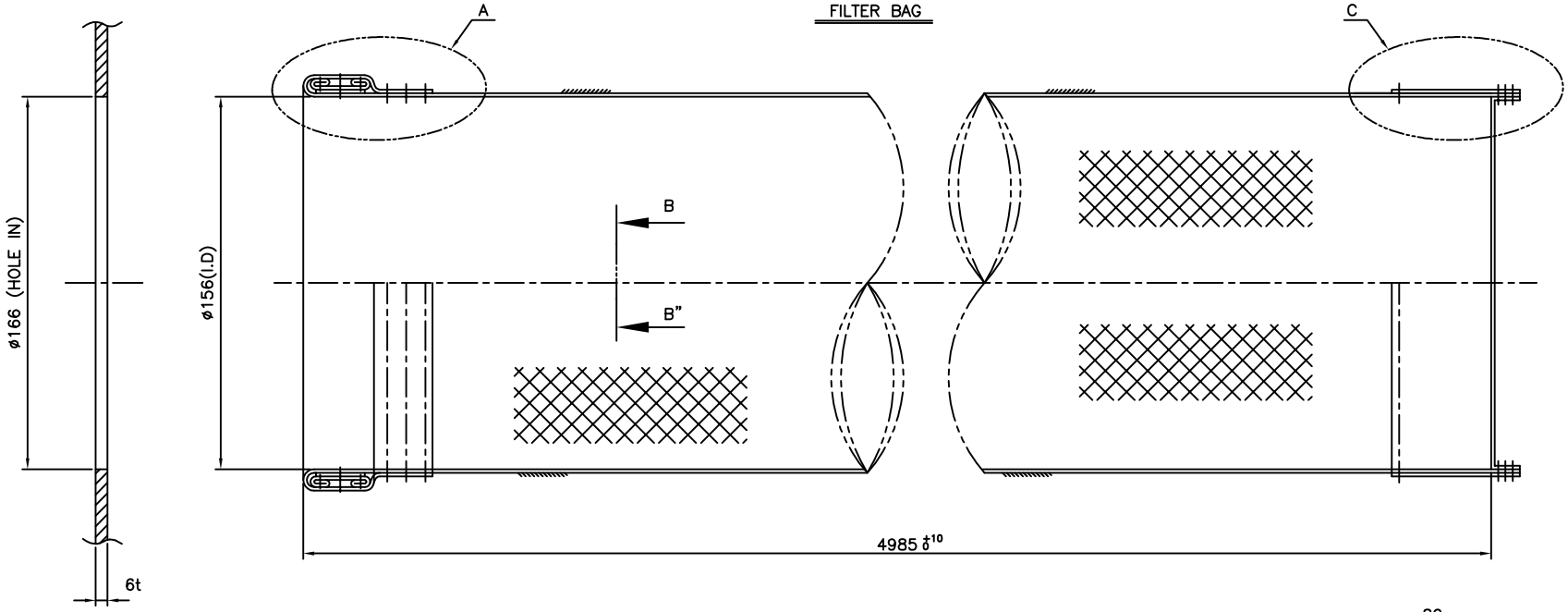

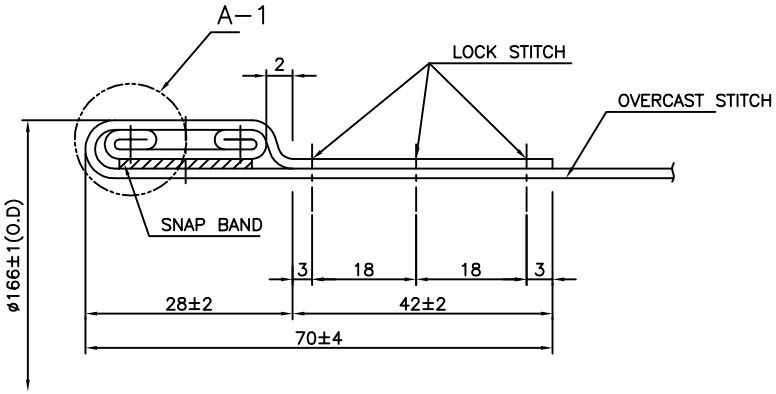

DETAIL A

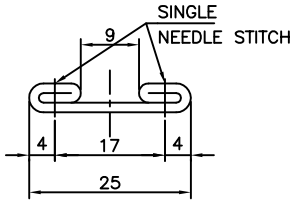

DETAIL A–1

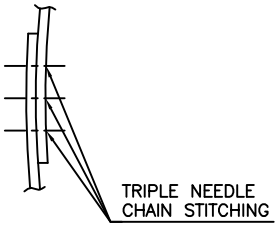

SECTION B–B"

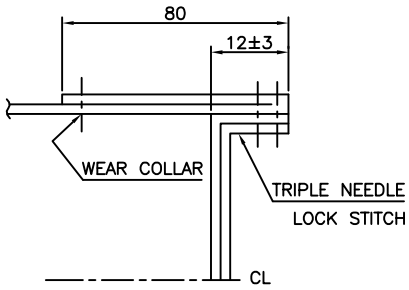

DETAIL C

SPECIFICATION	
MATERRIAL	100% PTFE (WHITE)+ PTFE Coating
WEIGHT	750g/m²
SIZE	ø156(I.D)x4985L
TEMP.	MAX 260 °C

REV.	DATE	REV. DESCRIPTION	DRAWN	CHECKED	REVIEWED	APPROVED
△	2020.03.04	FOR APPROVAL				

Designed by
Checked by
Approved by
Issue Date
Release
Unit: mm
Scale: N/S
Language: English
Quality
Customer

Title: BAG FILTER DRAWING

Drawing No.: FILTER – AFT – QT4985

Spec No.

Supplier: Advnced Filter Technology Co., Ltd.

Index

A1

REV △ | DWG No. | PJT. No